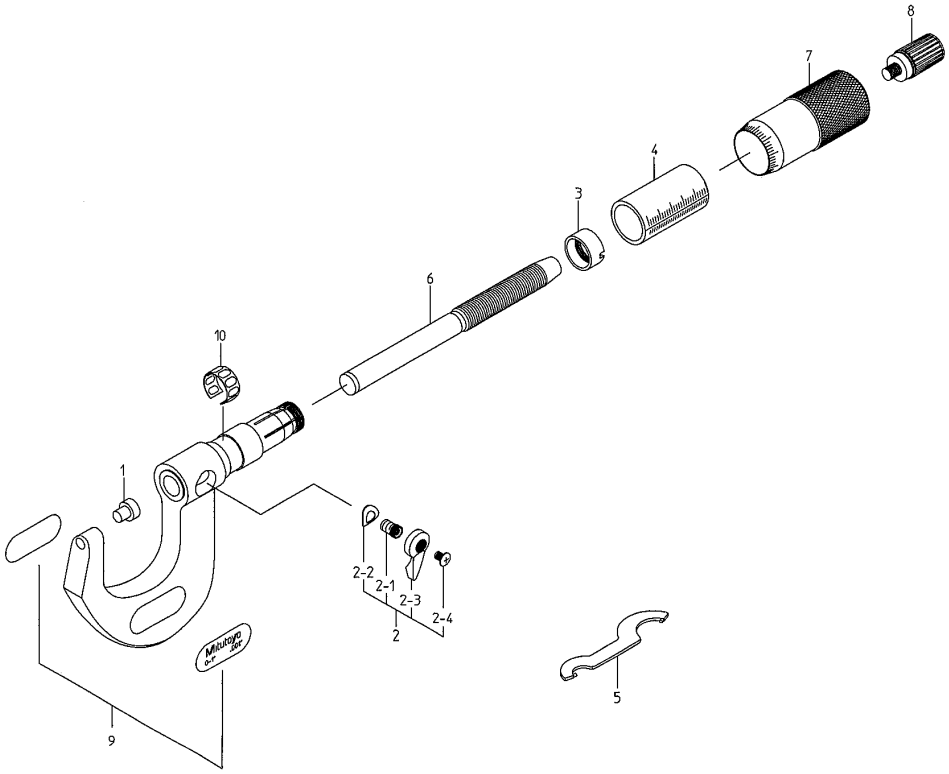

書類NO. 103-02

KEY NO.	ブヒンメイ	PART NAME	販売区分 CATEGORY	CODE NO. コードNO. 103-259 (M110-1″)	103-260 (M120-1″)	103-262 (M120-2″)				備考 COMMENTS
1	ｱﾝﾋﾞﾙ	ANVIL	Y1	200355						
2	ｸﾗﾝﾌﾟｸﾐﾀﾃ	CLAMP ASSY		950062						
2-1	ｸﾗﾝﾌﾟﾈｼﾞ	CLAMP SCREW		200421						
2-2	ｽﾌﾟﾘﾝｸﾞﾜｯｼｬ	SPRING WASHER		200420						
2-3	ｸﾗﾝﾌﾟﾊﾝｼｭ	CLAMP HANDLE		200425						
2-4	ﾄﾒﾈｼﾞ	SETSCREW		200424						
3	ﾃｰﾊﾟﾅｯﾄ	NUT,ADJ	Y	200415						
4	ｶﾞｲﾄｳ	SLEEVE	Y1	200116	200119					
5	ｽﾊﾟﾅ	SPANNER		301336						
6	ｽﾋﾟﾝﾄﾞﾙ	SPINDLE	Y1	200128						
7	ｼﾝﾌﾞﾙ	THIMBLE	Y1	200125						
8	ﾗﾁｪｯﾄ	RATCHET STOP		04GZA239						
9	ﾈｰﾑﾌﾟﾚｰﾄｸﾐﾀﾃ	NAMEPLATE ASSY		982243	982244	982268				
10	ﾊﾞﾈﾘﾝｸﾞ	SPRING	Y1	305461						
	【包装資材】	【PACKING】								
	ｶｸﾉｳﾊﾞｺ	HOUSING CASE		475001		475002				
	ｹｼｮｳｹｰｽ	PAPER CASE		471077		471078				