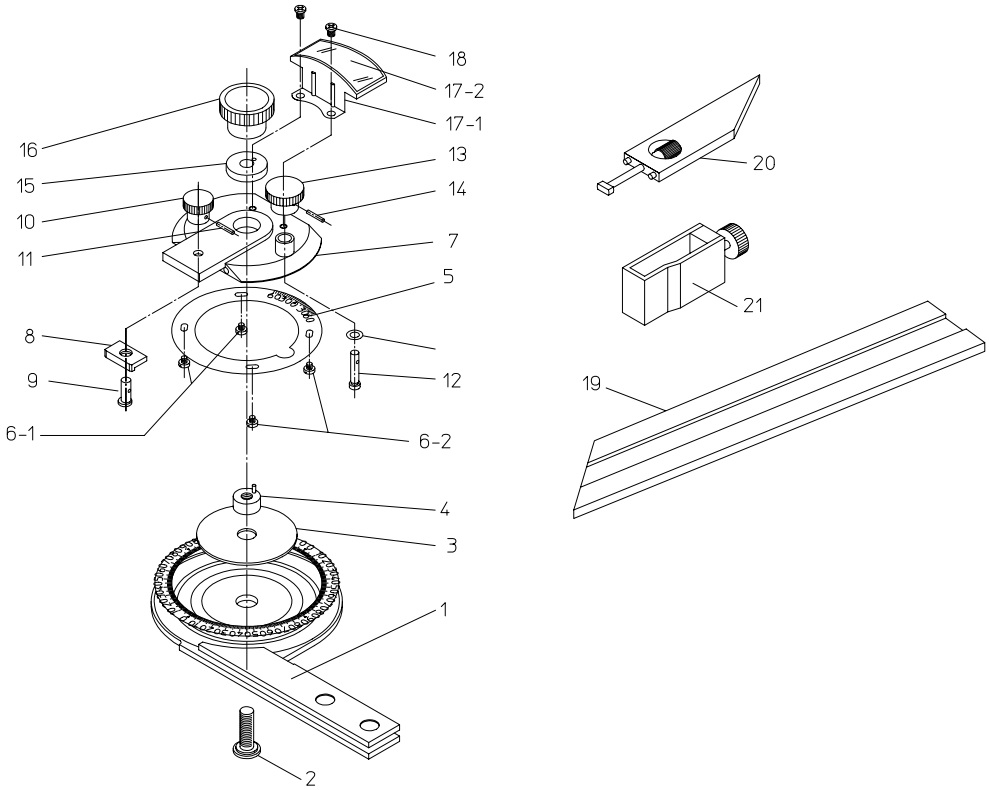

書類NO, 187-02

KEY NO,	ブヒンメイ	PART NAME	販売区分 CATEGORY	CODE NO, コードNO, 187-901 150/300	187-907 150MM	187-908 300MM	187-902 6/12	187-904 6″	187-906 12″	備考 COMMENTS
1	ﾀﾞｲｲﾀｸﾐﾀﾃ	BODY		952631						
2	ｼﾞｭｼﾞｸ	BOLT		208113						
3	ｷﾞﾔｰ	GEAR		208114						
4	ｼﾞｭｼﾞｸｶﾗ	THREADED COLLAR		208615						
5	ﾌｸｼﾞｬｸｲﾀｸﾐﾀﾃ	VERNIER PLATE, ASSY		952632						
6-1	ﾋﾗｺﾈｼﾞ	SET SCREW		208119						
6-2	ﾋﾗｺﾈｼﾞ	SET SCREW		211070						
7	ﾀｰﾚｯﾄ	TURRET		953342						
8	ﾌﾞﾚｰﾄﾞﾂﾒ	NAIL, BLADE		208972						
9	ﾍﾝｼﾝﾋﾟﾝ	ECCENTRIC PIN		208126						
10	ﾌﾞﾚｰﾄﾞﾊﾝﾄﾞﾙ	HANDLE, BLADE		208128						
11	ｽﾌﾟﾘﾝｸﾞﾋﾟﾝ	PIN, SPRING		208127						
12	ﾋﾟﾆｵﾝ	PINION		208129						
13	ﾋﾞﾄﾞｳﾊﾝﾄﾞﾙ	HANDLE, FINE ADJ		208130						
14	ｽﾌﾟﾘﾝｸﾞﾋﾟﾝ	PIN, SPRING		208127						
15	ﾜｯｼｬ	WASHER		208122						
16	ｸﾗﾝﾌﾟ	CLAMP		952634						
17	ﾙｰﾍﾟｸﾐﾀﾃ	RUPE, ASSY		950748						
17-1	ﾙｰﾍﾟﾜｸ	FRAME, RUPE		208131						
17-2	ﾙｰﾍﾟ	RUPE		208132						
18	ﾏﾙﾋﾗｺﾈｼﾞ	SET SCREW		208133						
19	ﾌﾞﾚｰﾄﾞ150MM 6″	BLADE 150MM, 6″		187-106		-	184-104		-	
	ﾌﾞﾚｰﾄﾞ300MM 12″	BLADE 300MM, 12″		187-107	-	187-107	187-103	-	187-107	
20	ｴｲｶｸｱﾀｯﾁﾒﾝﾄ	ACUATE ANGLE ATTA.		187-105	-		187-105	-		
21	ﾊｲﾄｹﾞｰｼﾞﾖｳﾎﾙﾀﾞｰ	HEIGHT GAGE HOLDER		950750			950749			